DW341K JIGSAW 11

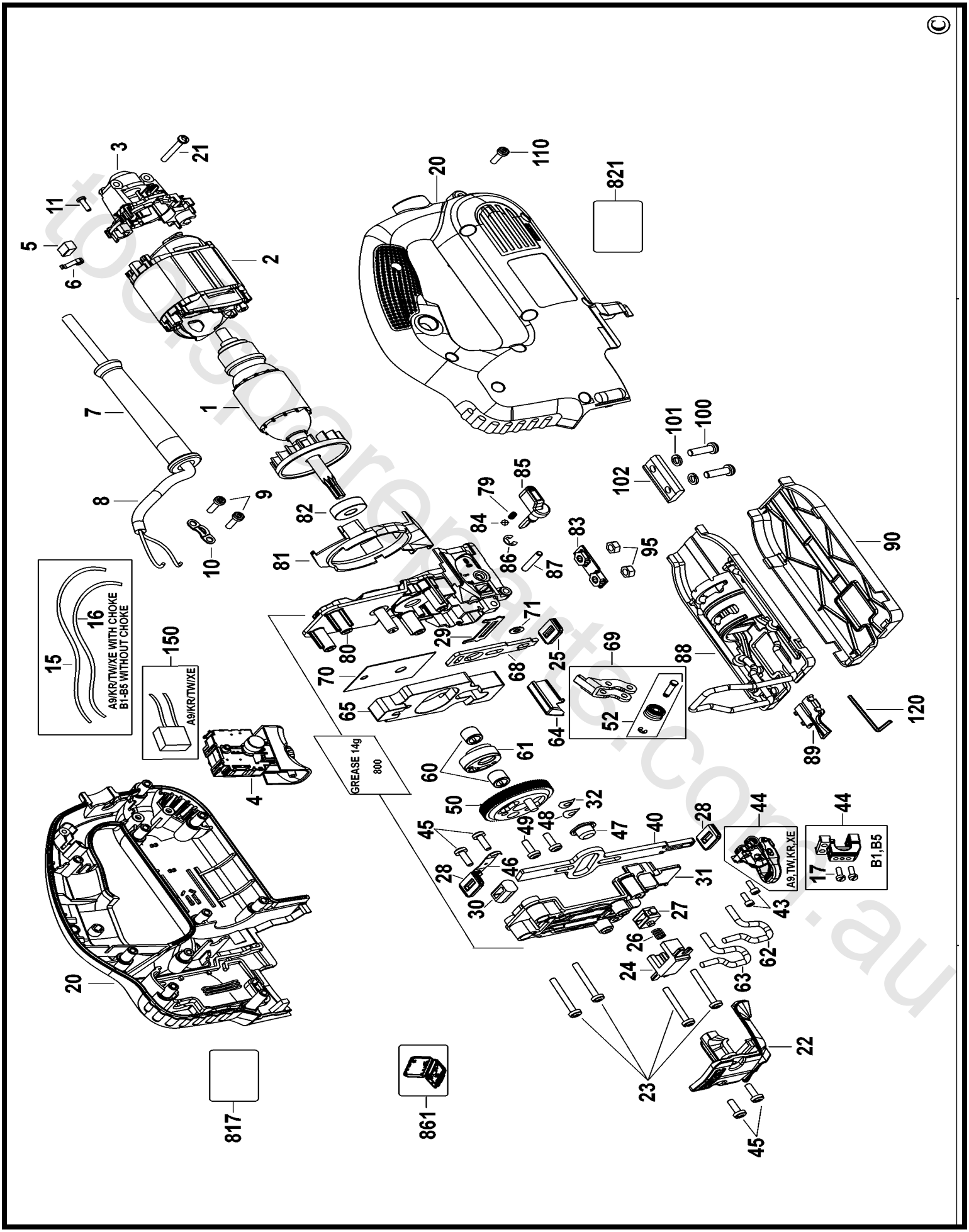

©